Product data sheet

TRACK AIR ECO

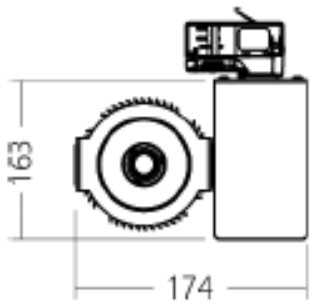

Description	3f-track spot with separate driver(box), sheet steel, , black aluminium heatsink,
Dimensions (mm)	174mm x 163mm x 89mm
Weight (kg)	0,900 kg
Housing	Steel sheet, painted
Colour	Black(B), white(W) or silver grey(G)
Optical system	Facet, anodized reflector, COB
Lighting Distribution	Symmetric, 24° or 40°
Unified Glare Ratio	UGR 19-21
Colour temperature (K)	2700K - 3000 K – 4000K
CRI (Ra)	> 85
SCDM	3
Net lumen output (25°C)	1450-2700 lm
Efficacy – LOR (lm/W)	113-122 lm/W
Power (driver incl.)	11-22 W
Driver	Driver incorporated, not dimmable
IP	IP 20
IK	IK 02
Lifetime (hours)	50.000 hours L80 B30
Warranty	5 years
Origin	Slovakija
Norms	LVD 2006/95/EC EMC 2004/108/EC RoHS 2001/65/EC ISO 9001:2008
Marks	CE

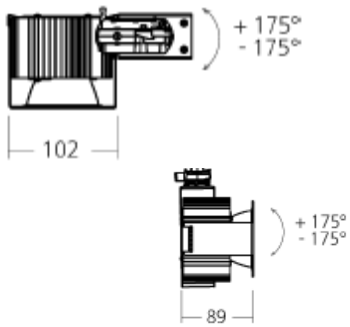

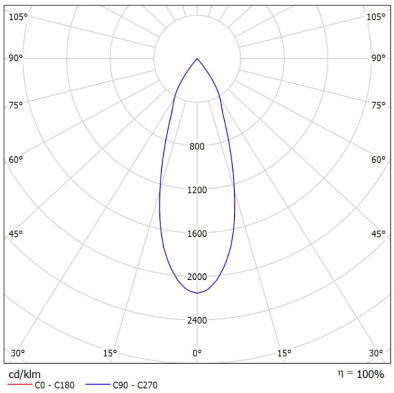

All specifications, descriptions and images are purely informative, not binding and subject to errors and changes

Euro-Luce Light Engineering
Ballingsweg 25 – 9620
Zottegem
info@euro-luce.be
www.euro-luce.be
Tel 0032 54 55 71 10